Technician's Corner

Make It Work

Conventional Fire Alarms

The **Technician's Essential Guide** *to Understanding Conventional Fire Alarm Systems*

Douglas Krantz E. T.

OK, this excerpt is from the chapter **"Conventional Fire Alarm System Supervision – Checking Continuity"**, (highlighted in yellow). Order the rest of the book from: https://douglas-krantz-s-fire-and-life-safety.myshopify.com/products/copy-of-make-it-work-conventional-fire-alarms-mobile

Chapter Headings:

Douglas Krantz’s Technician’s Corner
6520 Irving Ave So
Richfield, MN 55423

Conventional Fire Alarm System Supervision – Checking Continuity

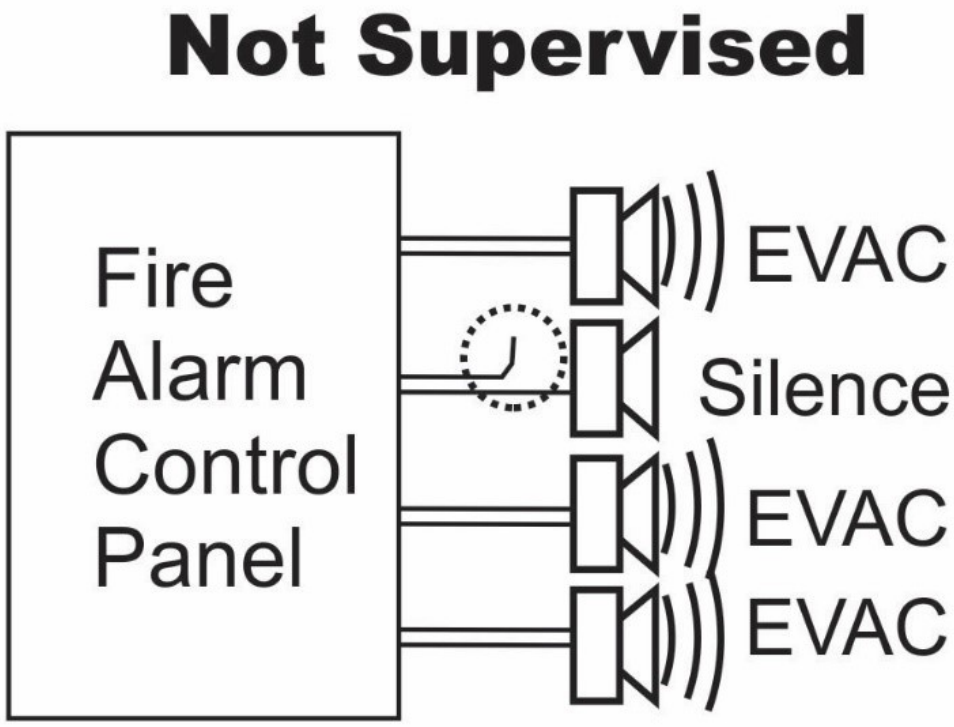

On conventional fire alarm systems, the devices are simple and don’t have a way of saying that they aren’t working, so each of the devices has to be regularly tested.

But, even when the devices work properly, in order for an individual device to be of any use, the device still has to be connected to the control panel.

Supervision is getting people to call for service.

When things don’t work right in a building, like when fire doors don’t stay open, many people who otherwise would be ignoring the fire alarm system call for service.

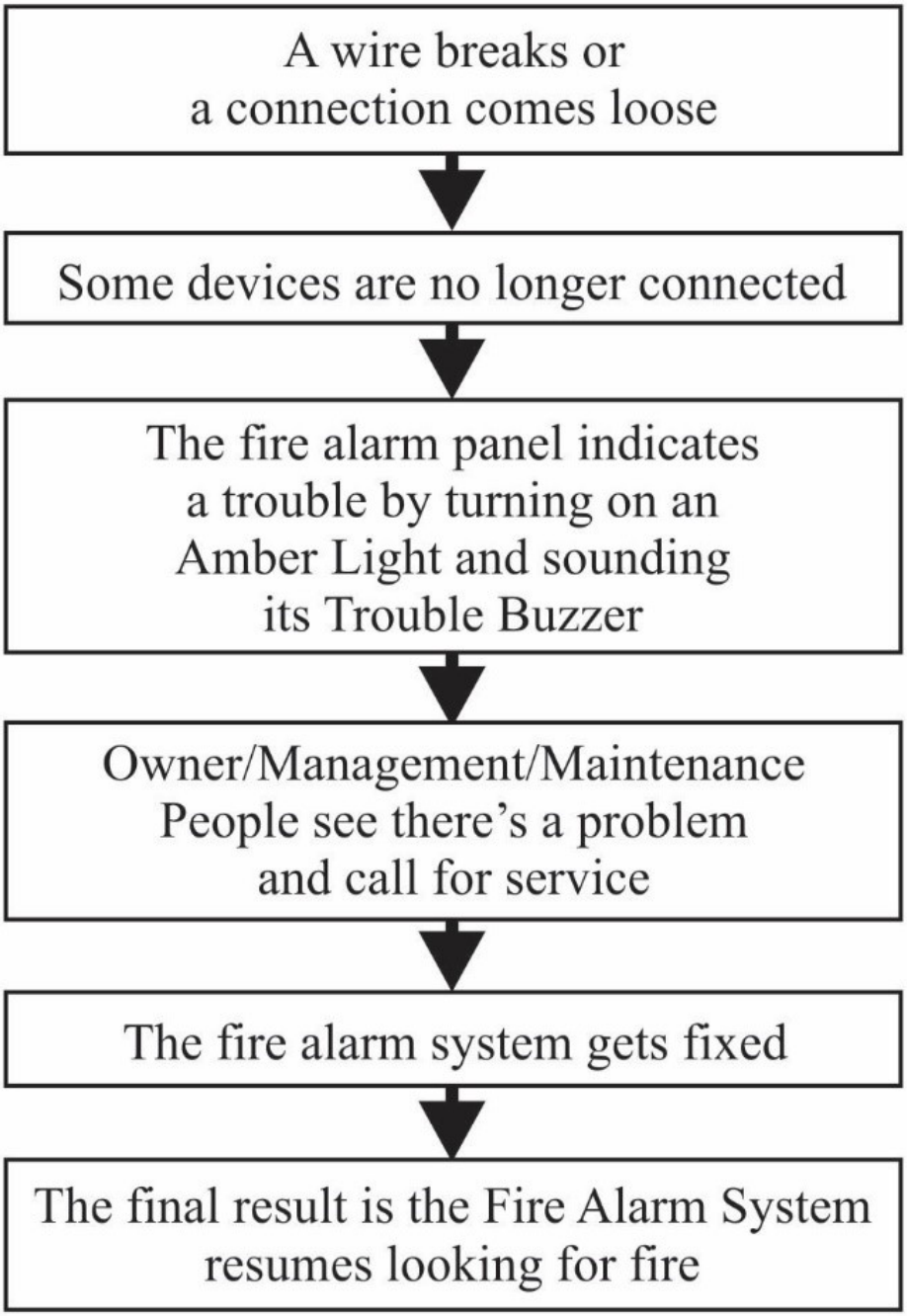

In essence, that’s what supervision is about: someone seeing a problem and then making sure the fire alarm system is fixed.

Class B and Class A Fire Alarm Loop Electrical Path

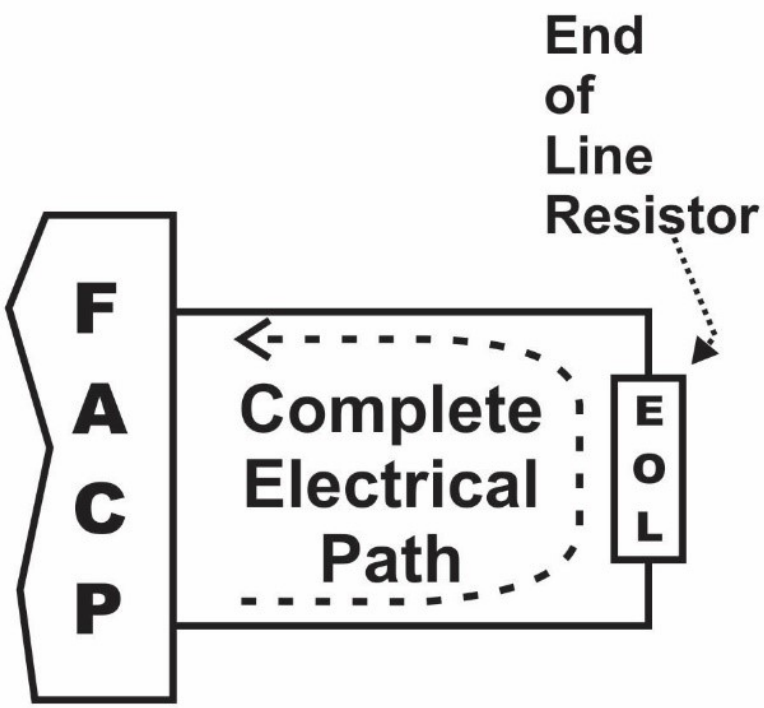

For a conventional fire alarm system, supervision is testing continuity. The Fire Alarm Control Panel (FACP) is the continuity tester and the fire alarm loop of wire is the electrical path being tested.

For a Class B circuit, the loop starts out at one of the Class B zone terminals of the fire alarm panel, goes through the end-of-line resistor, and returns to the other Class B zone terminal.

The panel uses voltage to push an electrical current through the complete electrical path of the loop. If the

current stops, the continuity tester (FACP) displays a yellow trouble light and sounds a trouble buzzer.

With Class B wiring, as long as it’s at the end of the loop, the end-of-line resistor can be anywhere in the building.

Splices and Junctions

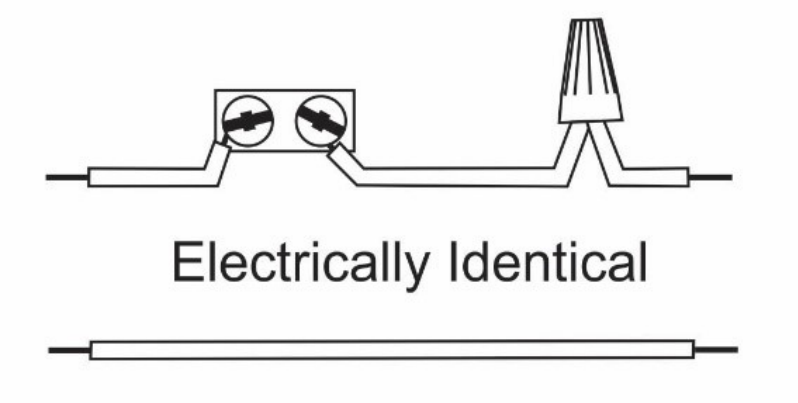

Keep in mind that the wire, at least mechanically speaking, has junctions and splices. To the electrons traveling through the wire, though, the wire is continuous.

With supervision, as long as the electrons continue to pass through the loop, splices and junctions don’t count.

Wiring Supervision

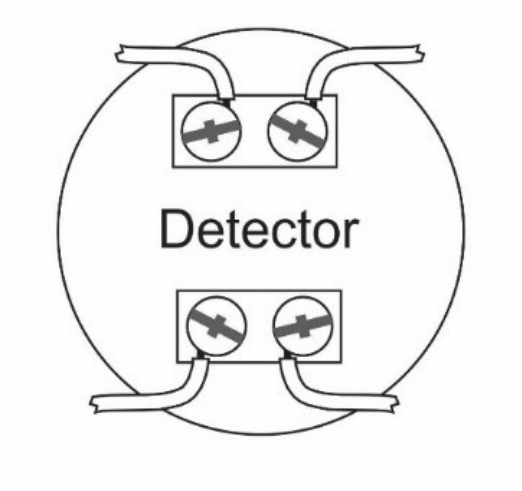

Remember, the whole purpose of wiring supervision is to make sure the devices are connected to the panel.

If a smoke detector or fire horn is removed or the wiring is broken somewhere in the building, the path is broken and no longer passes current. Supervision says to the panel, there’s a problem with the wiring; interpretation --- devices aren’t connected.

Class B Supervision

The idea of Class B is to find out there’s a problem, and then in a timely manner, get the problem fixed.

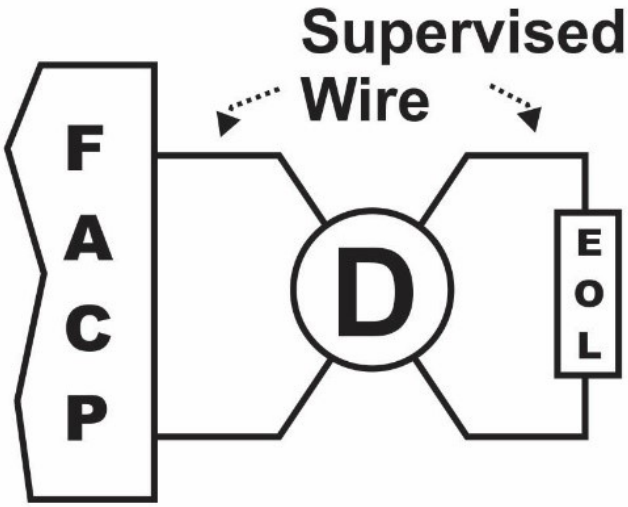

Supervised wire is connected so that all continuity checking current goes in and out of the terminals of each device. If any device is disconnected, the continuity is interrupted and supervision says there’s trouble.

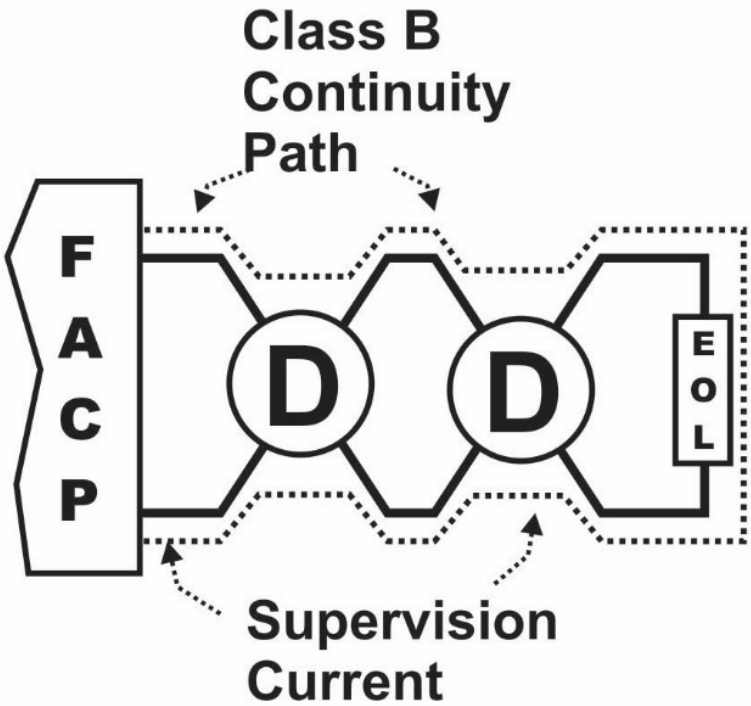

Like beads on a necklace, all devices are daisy-chained with the end-of-line resistor as the last device.

By wiring the loop this way, the supervision current is forced through every wire. The current can then check

continuity of all the wires and also check the input terminals of each device.

More information can be found at:
http://www.douglaskrantz.com/BlogLoopSupervision.html

T-Taps and Adding Devices

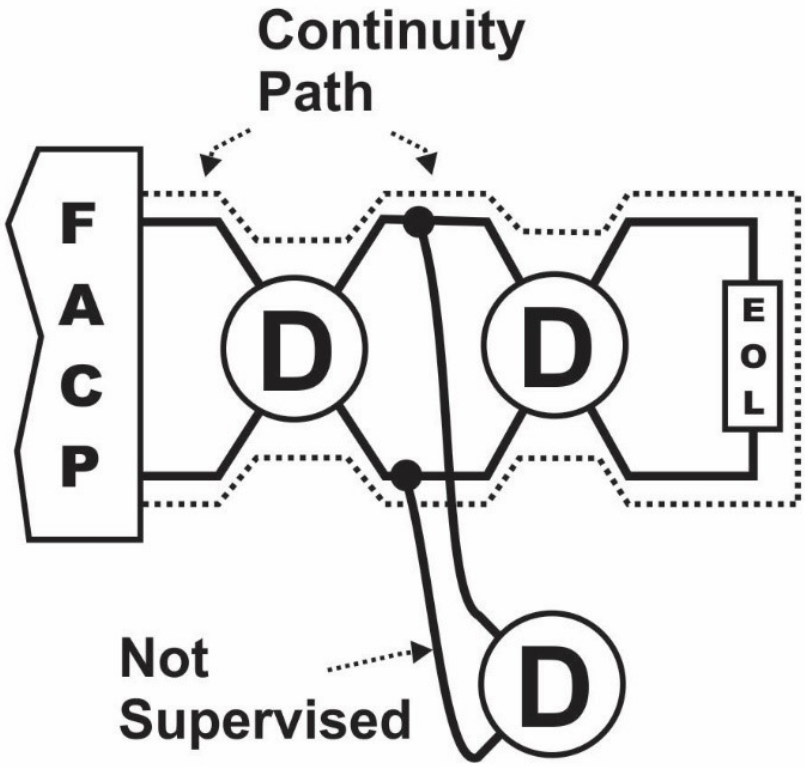

T-taps are dead ends. A t-tapped device is out of the continuity path. The t-tapped wire isn’t checked for continuity and therefore it is not supervised.

When the wiring isn’t supervised, the panel can’t tell if the device is still connected. When there’s a problem with the wiring,

because the panel doesn’t say anything, the wiring won’t get fixed.

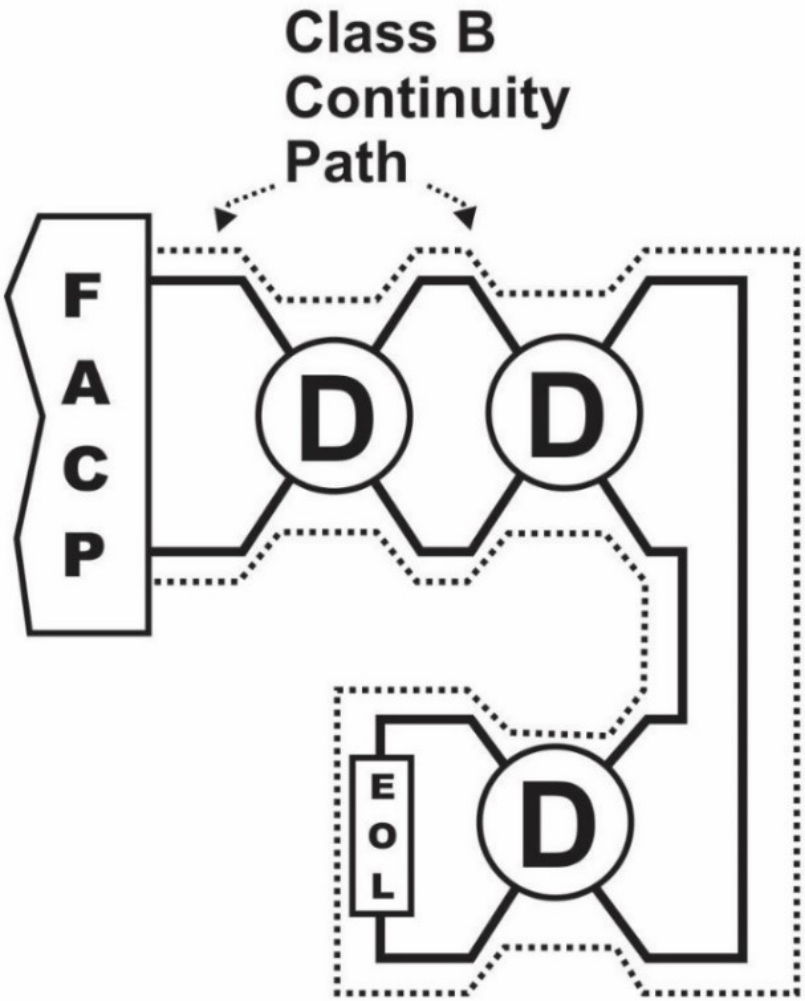

When adding devices, make sure that all the wires are always checked for continuity (supervised).

Class A Supervision and Redundancy

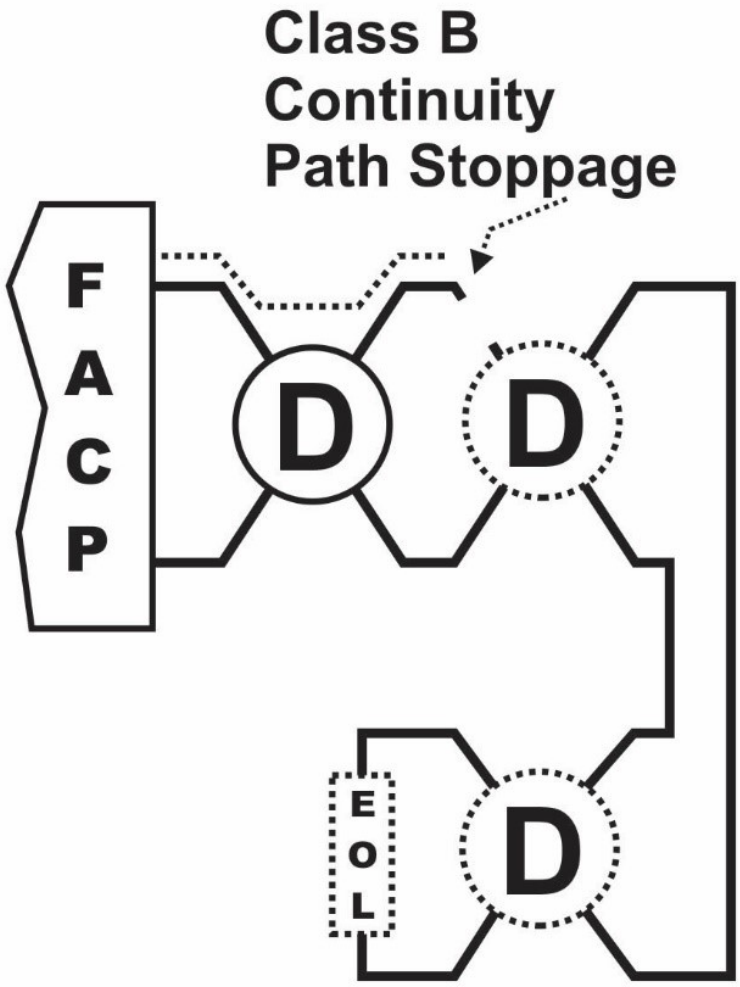

If the fire alarm system is wired correctly, a broken wire or connection anywhere on the circuit will stop the continuity current, then the supervision circuitry in the panel turns on the trouble light and buzzer, and the trouble can be fixed in a timely manner.

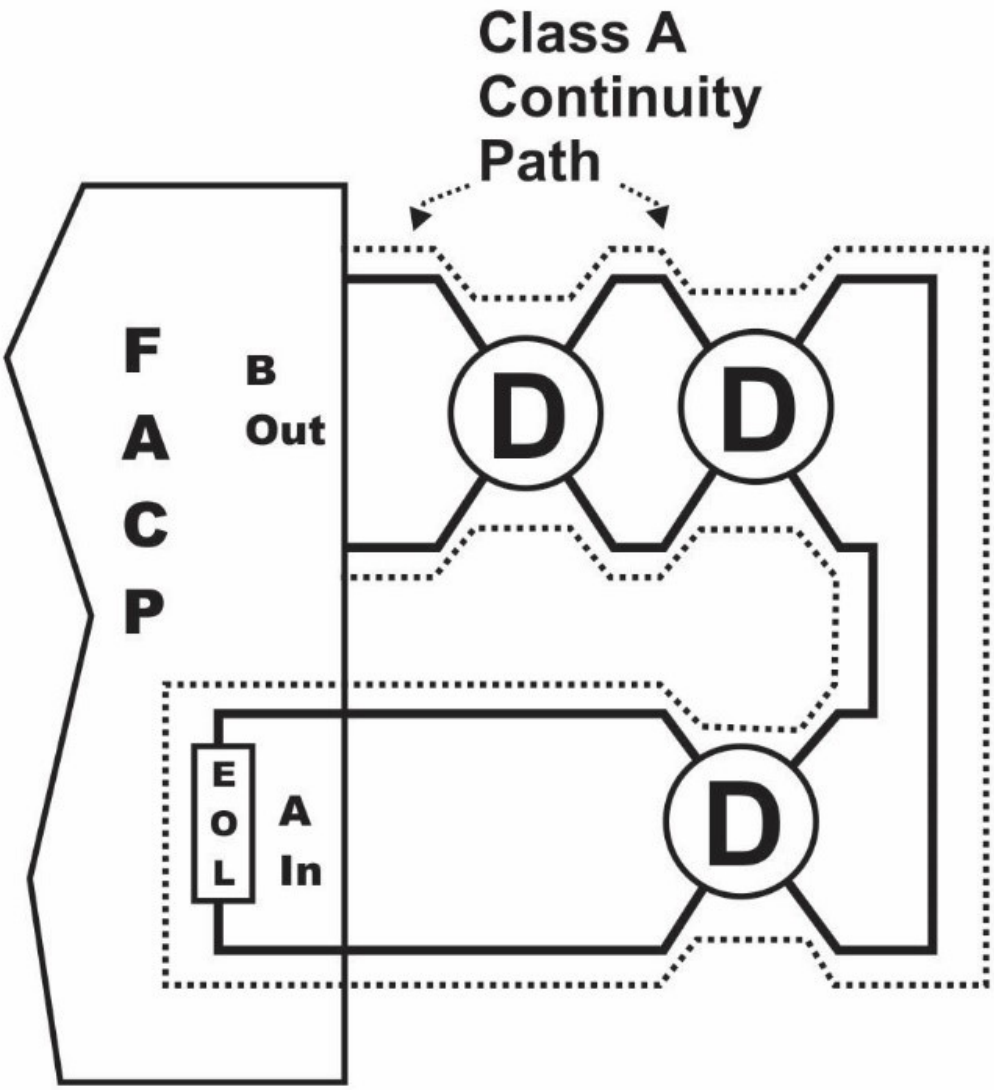

The problem is that a timely manner may not be good enough. Class B wiring may show there’s a problem, but in addition to showing that there’s a problem, Class A wiring goes a step further. Until the problem is fixed, Class A wiring goes around a broken wire or connection. In order to include the devices beyond the break, Class A wiring uses a redundant back-feed path.

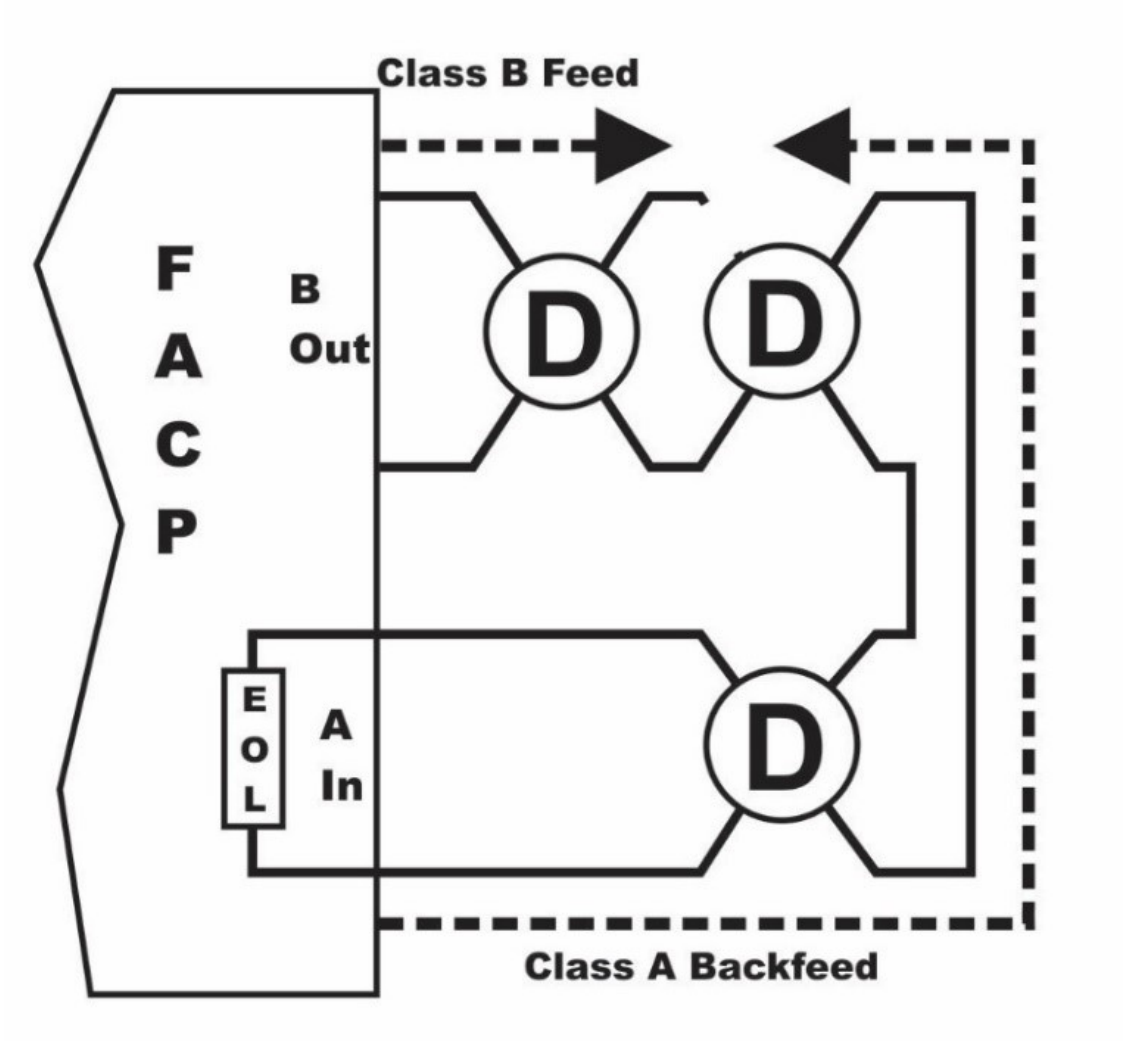

The idea of Class A is two-fold. It’s to find out in a timely manner that there’s a problem so the wiring can be fixed, and in the meantime, so the fire alarm system will continue to work, it provides a redundant method of communication.

For wiring purposes, Class A is really a Class B circuit. The only difference between Class A and Class B is that with Class A, the end-of-line resistor is either on the Class A terminals of the panel’s circuit board, or inside the circuitry of the board itself.

If a wire breaks or a connection comes loose, the fire alarm panel will switch from considering the loop as a single supervised Class A loop to two unsupervised class B loops.

This way, all or most of the devices will still be connected to the fire alarm panel.

In other words, even though an open fault in the Class A loop hasn’t been fixed yet, the devices will continue to detect fire or warn people.

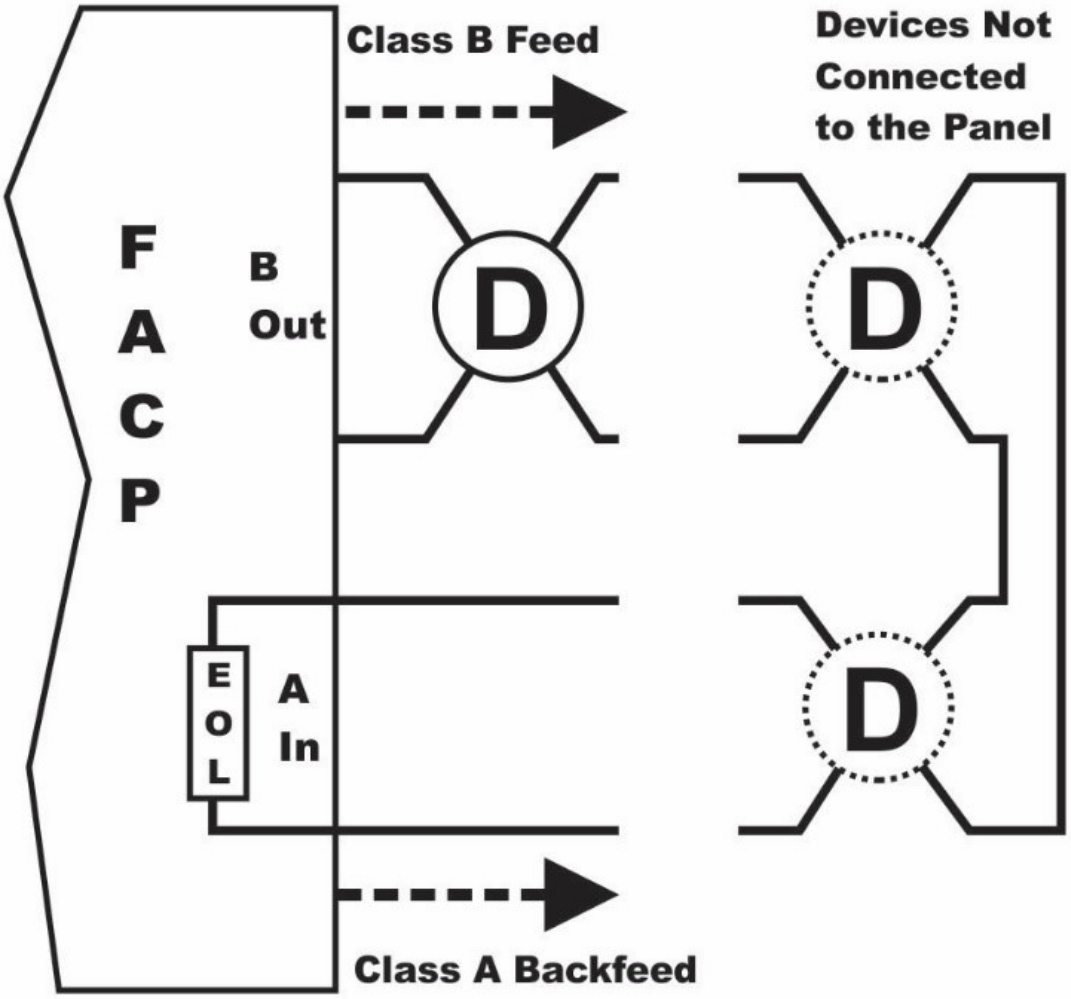

The whole idea behind Class A, of course, is that the loop will extend out of the panel in one direction, travel around the building, connect to all the devices, and return to the panel from another direction. This is so that if something like a forklift breaks the wires, the return path would be far enough away that only one pair of Class A wires would be cut.

If the feed and return wires are in different wiring paths, most or all of the devices will be able to communicate with the panel, either on the feed wires or on the return wires.

Yes, the NFPA indicates the minimum distance the feed and return pairs should be separated. Keep in mind, though, that the NFPA is indicating what to do if there is no alternative to running the wires close together.

In reality, if a fire alarm system installer is concerned with ease of installation, the installer should use the minimum separation distance specified in the NFPA Code. If, on the other hand, a fire alarm system installer is concerned with life-safety, the installer should run the wires in opposite parts of the building.